400 Series Filter Valve Body Assembly
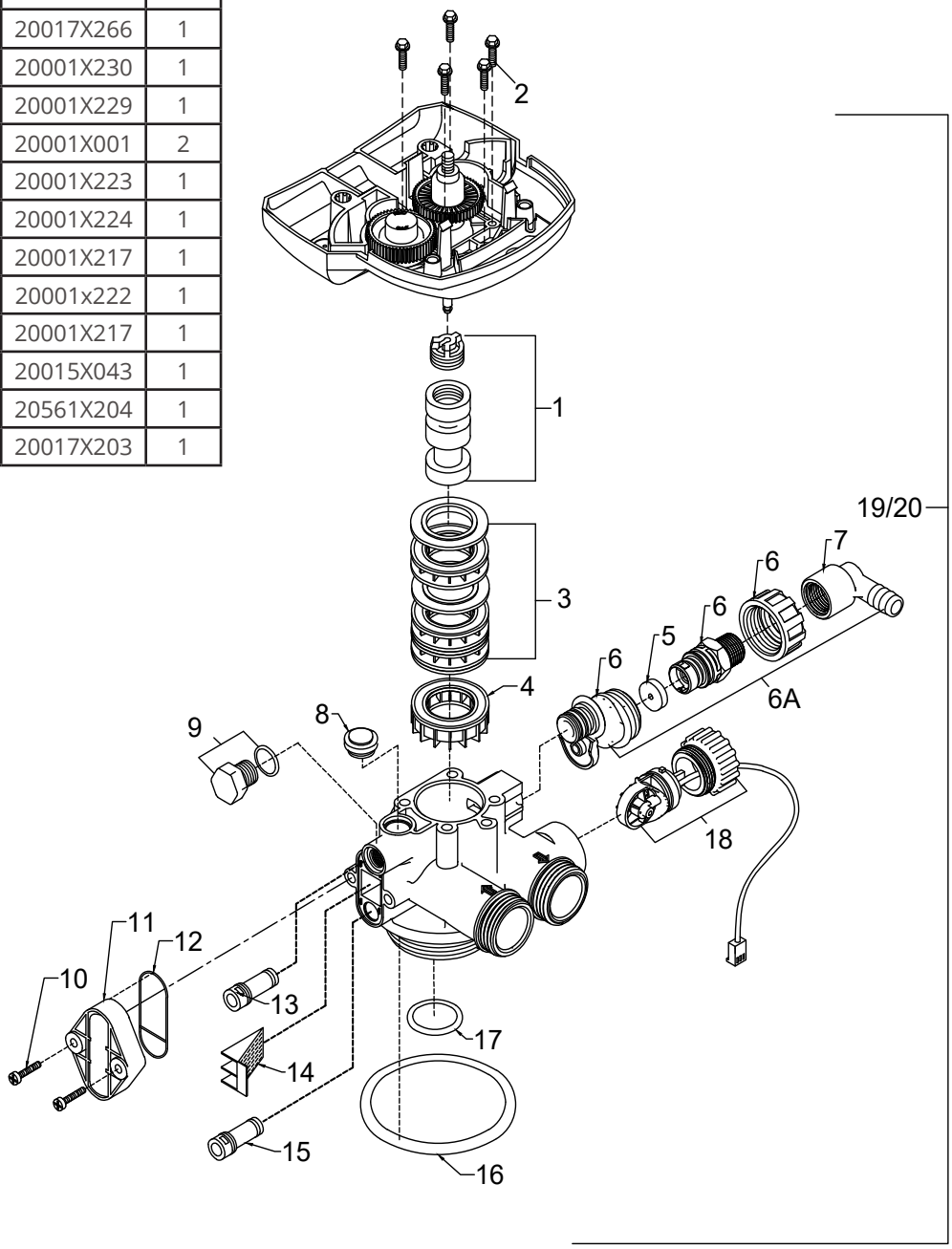
REF	DESCRIPTION	PART NO.	QTY
1	Piston Assembly	20019X231	1
2	10-24 X 3/4" Screw SST	20001X001	3
3	Seal and Spacer Kit Incl (5) #3 & (4) #4	20561X253	1
4	End Spacer	20001X234	1
5	Flow Control Button 5.0 GPM	20251X272	1
	Flow Control Button 7.0 GPM	20251X273	1
6A	DLFC Assy.	20017X251	1
7	90 Degree Hose Barb Elbow	20017X266	1
8	Brine Valve Plug w/ O-Ring	20001X230	1
9	Filter Plug Assy. w/ O-Ring	20001X229	1
10	10-24 X 3/4" Screw SST	20001X001	2
11	Injector Cap	20001X223	1
12	Injector Seal	20001X224	1
13	Injector Plug & O-Ring Assy.	20001X217	1
14	Injector Screen	20001x222	1
15	Injector Plug & O-Ring Assy.	20001X217	1
16	Valve O-Ring	20015X043	1
17	Dist. O-Ring	20561X204	1
18	Meter Assembly	20017X203	1